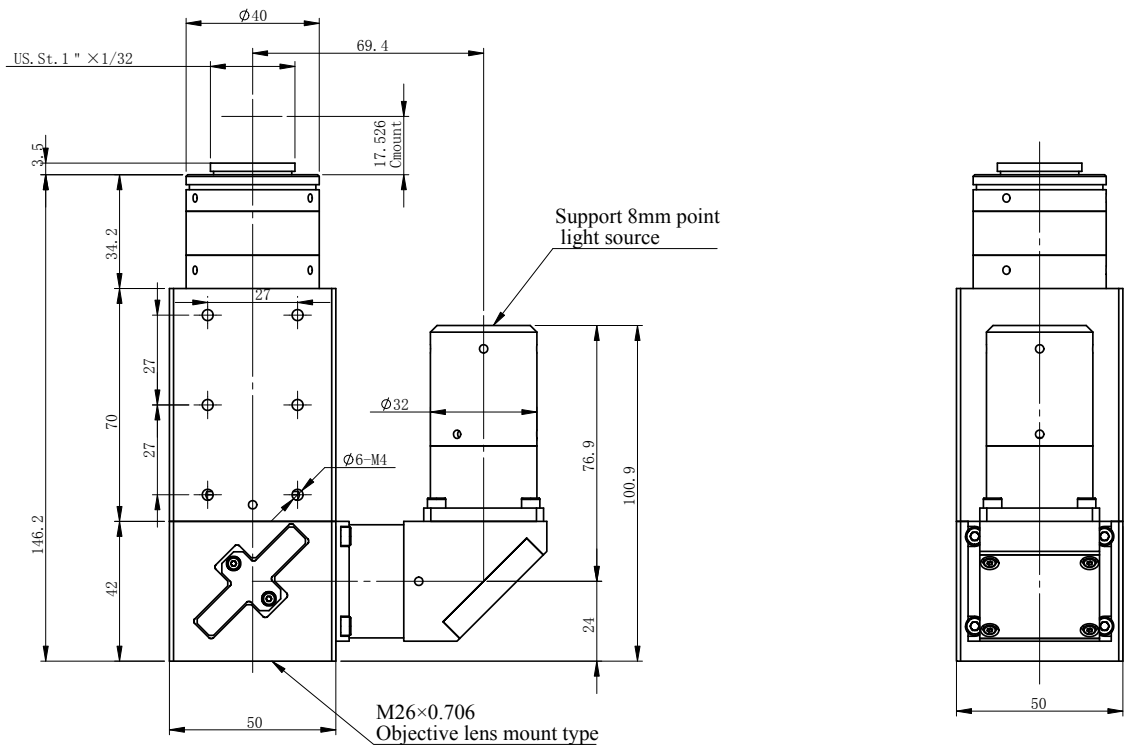

VMX-05-V63

Specification

1. Imaging magnification:	0.5X（100mm focal length）
2. Size of Image field:	2/3'（Diameter:11mm）
3. Max Entrance pupil diameter:	φ12mm
4. Imaging wavelength:	Visible light
5. Illumination wavelength:	Visible light
6. Illumination lens mount type:	8mm point light source
7. Objective lens mount type:	M26X0.706
8. Customize magnification :	0.96X、0.7X、0.63X

Undefined tolerance(mm)		degree	File Name		
X.X	±0.2	±30min			
X.XX	±0.02		Drawing Name		
X.XXX	±0.005	Drawing Size: A3			
	Sign	Data/Ver.	Material	Ratio	Product Name
Design		V6.3		1:1.5	
Modify1			Qty		
Modify2			Total:	Page:	

HOURS
www.hours-web.com