Z Axis Stainless Steel Extended Contact Slide Stages (Vertical)

Stage Size 25 × 25 mm / 40 × 40 mm / 60 × 60 mm / 65 × 65 mm

TSDS-3L RoHS Catalog Code W7152

Stainless Steel Linear Stages suitable for hard vacuum and clean room applications.
Same design and performance as TSD stages.
Completely made of stainless steel, for excellent corrosion resistance.
Both the stage and the stainless steel micrometer head are lubricated with a high grade vacuum grease (YVAC2).

Guide

▶The TSDS series stages are suitable for use in clean rooms or vacuum applications.
Reference Vacuum measurement data E205
Also ideal for use in airtight spaces that have to avoid outgassing.

2D CAD 3D CAD

Outline Drawing

TSDS-253L Hexagon socket head cap screw (stainless steel construction) M2×6...4 screws

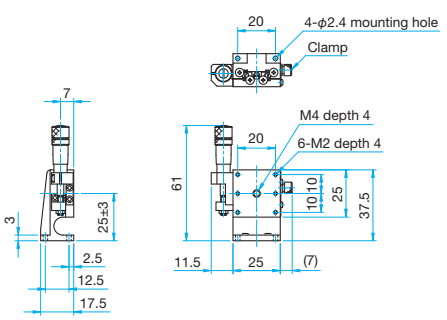

TSDS-403L/403LUU Hexagonal socket head cap screw M3×6...4 screws
Hexagonal socket head cap screw 6-32UNC×1/4...4 screws (UU)

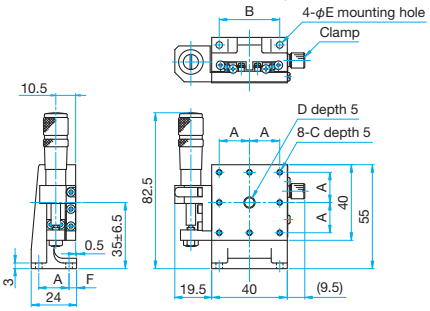

Part Number	TSDS-403L	TSDS-403LUU
A (mm)	16	15.875
B (mm)	32	31.75
C	M3	6-32UNC
D	M6 P1	1/4-20UNC
E (mm)	3.5	4
F (mm)	4	3.625

TSDS-603L Hexagon socket head cap screw (stainless steel construction) M4×8...4 screws

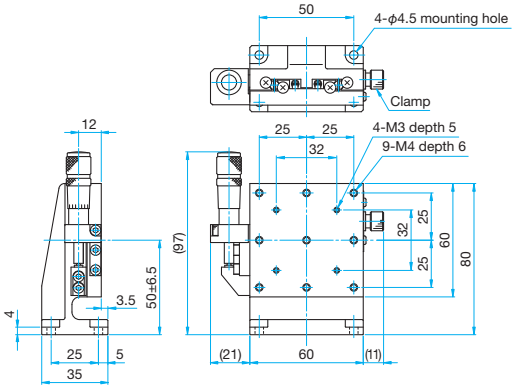

TSDS-653L-M6/653LUU Hexagonal socket head cap screw M6×6...4 screws (M6)
Hexagonal socket head cap screw 1/4-20UNC×1/4...4 screws (UU)

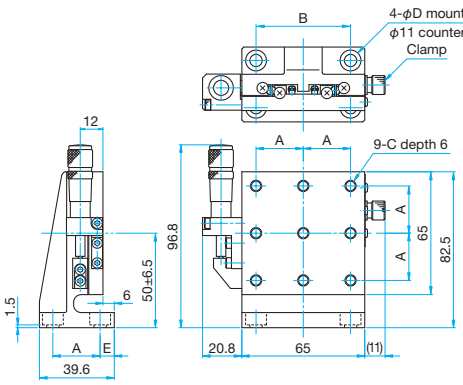

Part Number	TSDS-653L-M6	TSDS-653LUU
A (mm)	25	25.4
B (mm)	50	50.8
C	M6 P1	1/4-20UNC
E (mm)	6.5	7
F (mm)	11	12

Specifications

Part Number	METRIC	TSDS-253L	TSDS-403L	TSDS-603L	TSDS-653L-M6
	INCH	—	TSDS-403LUU	—	TSDS-653LUU
Stage Size [mm]		25×25	40×40	60×60	65×65
Axes of Travel		Z axis			
Micrometer Position		Side	Side	Side	Side
Travel [mm]		±3	±6.5	±6.5	±6.5
Lead of Actuator [mm/rotation]		0.5	0.5	0.5	0.5
Micrometer Readable Resolution [mm]		0.01	0.01	0.01	0.01
Guide Method		Extended contact ball bearing guide			
Primary Material		Stainless steel			
Finish		None			
Load Capacity [N]		14.7 (1.5kgf)	49.0 (5.0kgf)	49.0 (5.0kgf)	49.0 (5.0kgf)
Travel Accuracy	Straightness [μm]	1	1	1	1
Max. Moment Capacity	Pitch [N·m]	2.2	5	8	8
	Roll [N·m]	2.1	5	8	8
Moment Stiffness	Pitch [″/N·cm]	3.3	0.6	0.25	0.25
Parallelism [μm]		30	30	30	30
Running Parallelism [μm]		20	20	20	20
Weight [kg]		0.1	0.3	0.8	0.9